Wash Trough S5

Hob Mounted Taps

Stoddart Manufacturing's famous S5 Wash Trough is ideal for workshops, art studios and sporting venues.

This unit is designed for hob mounted taps, not supplied.

Trough dimensions allow easy access for children.

The S5 trough is manufactured with ease of installation in mind. Z clips secure the trough to the wall quickly and easily so the two high strength angle bracket supports can be fixed to the wall. These brackets provide strength and can be quickly secured to the wall.

Safety grates can be ordered separately. These are ideal for use as a child safety barrier and are also useful for parts washing or as a bucket sink.

Models:

SPPL.WT.S5.WM.x.yyyy

Code explanation:

SPPL	= Standard Product Plumbing
WT	= Wash Trough
S5	= S5 Style
xx	= WM – Wall Mounted = FS – Free Standing
y	= L – Left hand end waste = R – Right hand end waste
zzzz	= Length of trough

e.g.: for specification and ordering

SPPL.WT.S5.WM.R.1800

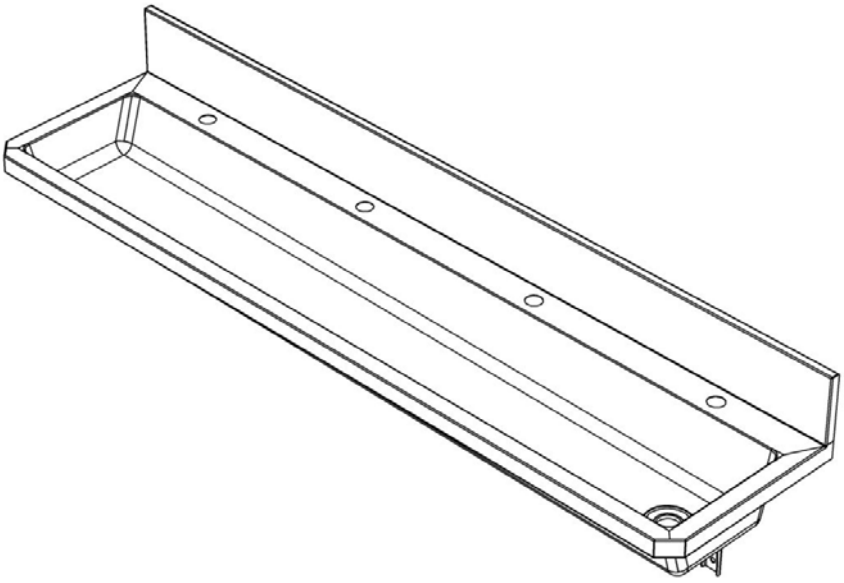

Features and Benefits:

- 75mm hob at rear of trough for surface mounting tap ware and spouts.
- 50mm waste can be positioned at either the left or right end.
- Optional safety grate can be added for child care centre applications.
- Units can also be ordered as (FS) Free standing option on legs with adjustable flanged feet

ASSDA ACCREDITED

Due to continuous product research and development, the information contained herein is subject to change without notification.

Manufactured by: Tom Stoddart Pty Ltd. ABN 16 009690251
149 Jackson Road, Sunnybank Hills, Qld
Tel +61 7 33455011, Fax +61 7 33441000
Web site: www.stoddart.com.au
Email: sales@stoddart.com.au

Data Sheet Revision Date 01/03/2011

STODDART MANUFACTURING
STAINLESS PLUMBING PRODUCTS

Plumbing Products

Wash Trough S5

Hob Mounted Taps

Specifications:

Construction:	Fully welded seamless 304 grade stainless steel construction, no 4 brushed finish.
Waste Connection:	50mm PVC, supplied.
Tap Locations:	450mm tap centres. Custom tap locations can be supplied, if required, as an extra.
Unit Fixing:	The unit is supplied with stainless steel wall mounting brackets, which have 11mm diameter fixing holes, and stainless steel splashback Z clips. The Trough is fixed to the bracket with 6mm stainless steel fixings.

R/H WASTE SHOWN
CENTRE WASTE AVAILABLE - AS AN EXTRA

Models:

SPPL.WT.S5.WM.x.yyyy

Code explanation:

SPPL	= Standard Product Plumbing
WT	= Wash Trough
S5	= S5 Style
xx	= WM – Wall Mounted = FS – Free Standing
y	= L – Left hand end waste = R – Right hand end waste
zzzz	= Length of trough

e.g.: for specification and ordering

SPPL.WT.S5.WM.R.1800

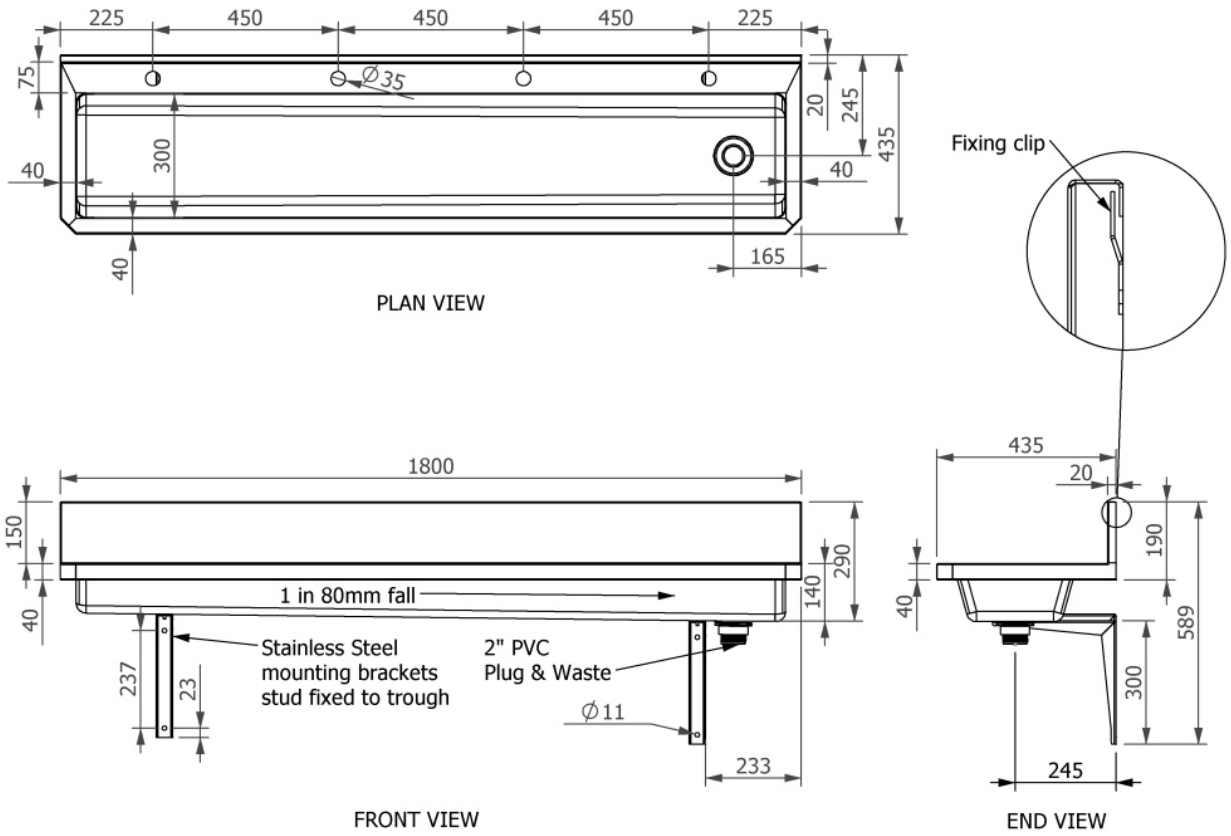

Model No.	Length (mm)	No. of Tap Holes
SPPL.WT.S5.WM.x.0900	900	2
SPPL.WT.S5.WM.x.1200	1200	2
SPPL.WT.S5.WM.x.1500	1500	3
SPPL.WT.S5.WM.x.1800	1800	4
SPPL.WT.S5.WM.x.2000	2000	4
SPPL.WT.S5.WM.x.2400	2400	5
SPPL.WT.S5.WM.x.2700	2700	6
SPPL.WT.S5.WM.x.3000	3000	6
SPPL.WT.S5.WM.x.3300	3300	7
SPPL.WT.S5.WM.x.3600	3600	8
SPPL.WT.S5.WM.x.4000	4000	9
Custom units available at a premium.		

Due to continuous product research and development, the information contained herein is subject to change without notification.

Manufactured by: Tom Stoddart Pty Ltd. ABN 16 009690251
149 Jackson Road, Sunnybank Hills, Qld
Tel +61 7 33455011, Fax +61 7 33441000
Web site: www.stoddart.com.au
Email: sales@stoddart.com.au

Data Sheet Revision Date 01/03/2011