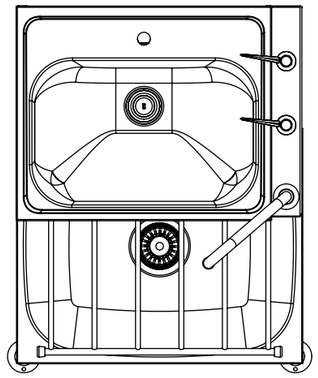

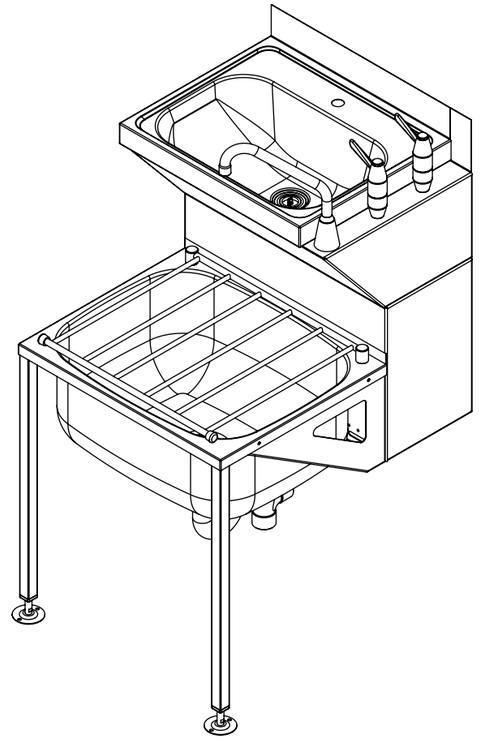

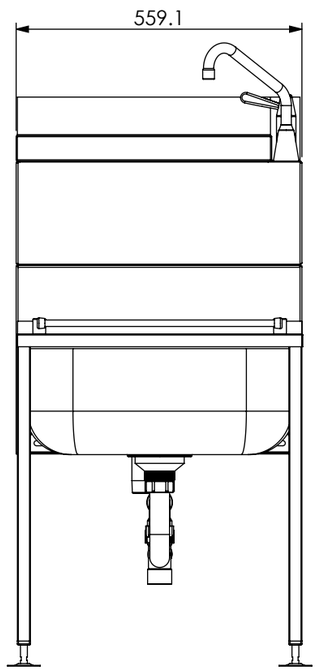

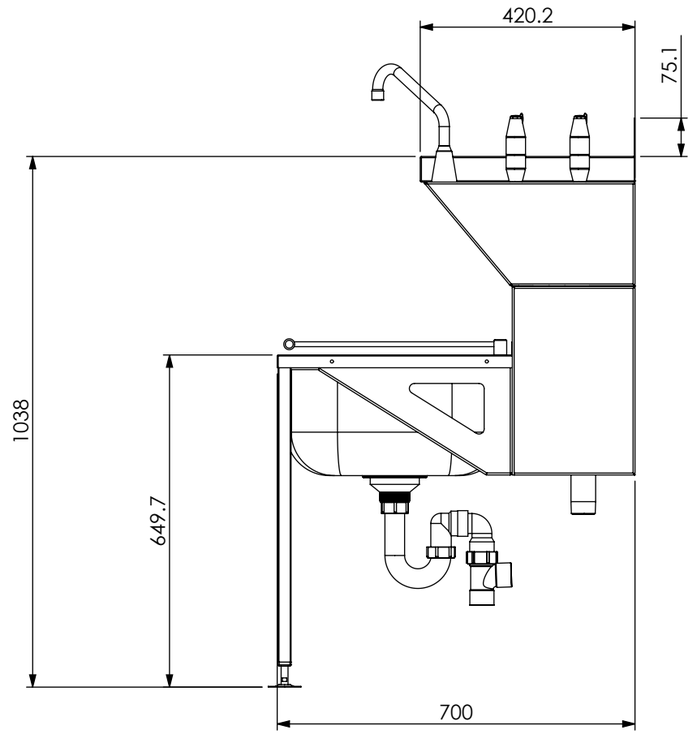

STODDART
MANUFACTURING
TOM STODDART Pty Ltd ACN 009 690 251
149 Jackson Rd Sunnybank Hills Qld 4109
PO Box 420 Sunnybank Qld 4109
Phone (617) 3345 5011 Fax (617) 3344 1000
Email sunnybank@stoddart.com.au
Quality in stainless steel

	NAME	SIGNATURE	DATE	UNLESS OTHERWISE SPECIFIED: DIMENSIONS ARE IN MILLIMETERS
DRAWN	F Caramat		7/04/2010	
APPV'D				MATERIAL:
Weight: Surface Area:				THICKNESS: FINISH:

PART No: **Assem1**

DESCRIPTION:

DWG No: Draw1

Dwg. Issue 2

DO NOT SCALE DRAWING

This drawing remains the property of Tom Stoddart Pty Ltd & cannot be reproduced without prior permission.

A3

STODDART
MANUFACTURING
TOM STODDART Pty Ltd ACN 009 690 251
149 Jackson Rd Sunnybank Hills Qld 4109
PO Box 420 Sunnybank Qld 4109
Phone (617) 3345 5011 Fax (617) 3344 1000
Email sunnybank@stoddart.com.au
Quality in stainless steel

	NAME	SIGNATURE	DATE
DRAWN	F Caramat		7/04/2010
APPV'D			

Weight:
Surface Area:

UNLESS OTHERWISE SPECIFIED:
DIMENSIONS ARE IN MILLIMETERS

MATERIAL:
THICKNESS:
FINISH:

PART No:

DESCRIPTION:

DWG No: Draw1

Dwg. Issue 2

DO NOT SCALE DRAWING

This drawing remains the property of Tom Stoddart Pty Ltd & cannot be reproduced without prior permission.

A3

Sheet 2 of 9

F:\5_Plumbing\03_Engineering - Plumbing\R& D- Plumbing\Janitorial Sink\

STODDART
MANUFACTURING
TOM STODDART Pty Ltd ACN 009 690 251
149 Jackson Rd Sunnybank Hills Qld 4109
PO Box 420 Sunnybank Qld 4109
Phone (617) 3345 5011 Fax (617) 3344 1000
Email sunnybank@stoddart.com.au
Quality in stainless steel

	NAME	SIGNATURE	DATE
DRAWN	F Caramat		7/04/2010
APPV'D			

Weight:
Surface Area:

UNLESS OTHERWISE SPECIFIED:
DIMENSIONS ARE IN MILLIMETERS

MATERIAL:
THICKNESS:
FINISH:

PART No:

DESCRIPTION:

DWG No: Draw1

Dwg. Issue 2

DO NOT SCALE DRAWING

This drawing remains the property of Tom Stoddart Pty Ltd & cannot be reproduced without prior permission.

A3

Sheet 3 of 9

F:\5_Plumbing\03_Engineering - Plumbing\R& D- Plumbing\Janitorial Sink\

SPPL-CS-01-450-P003

Leg Bracket

2 Galvabond

1 Req

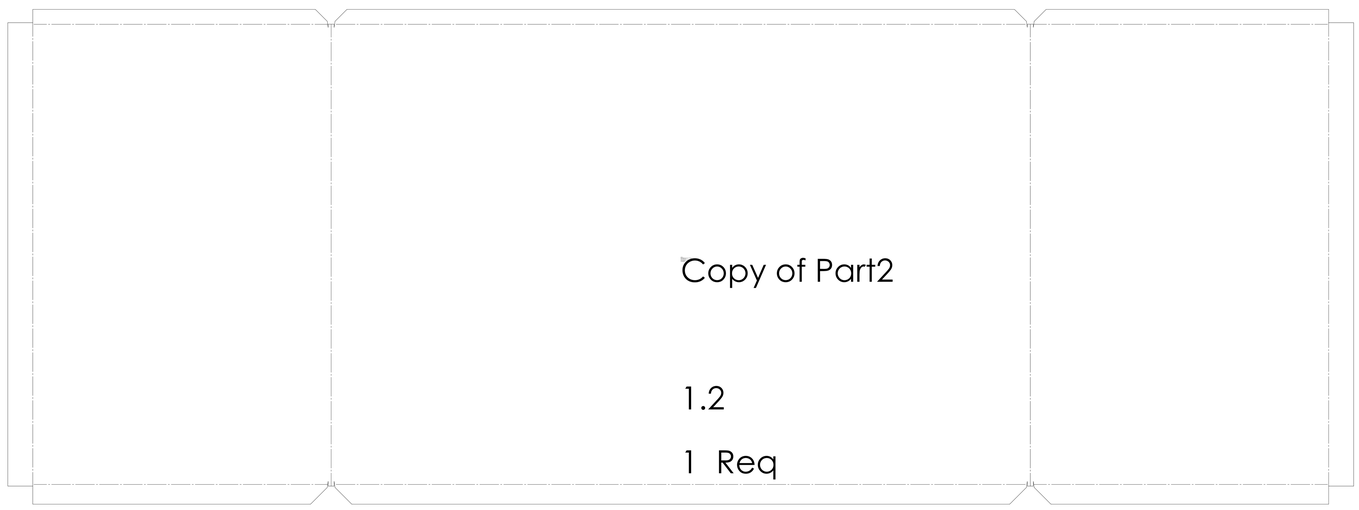

Copy of Part2

1.2

1 Req

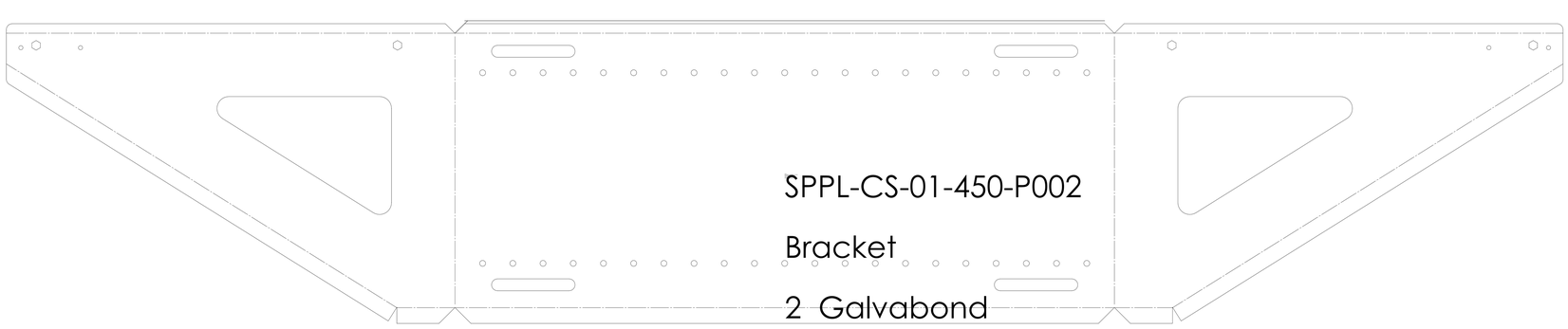

SPPL-CS-01-450-P002

Bracket

2 Galvabond

1 Req

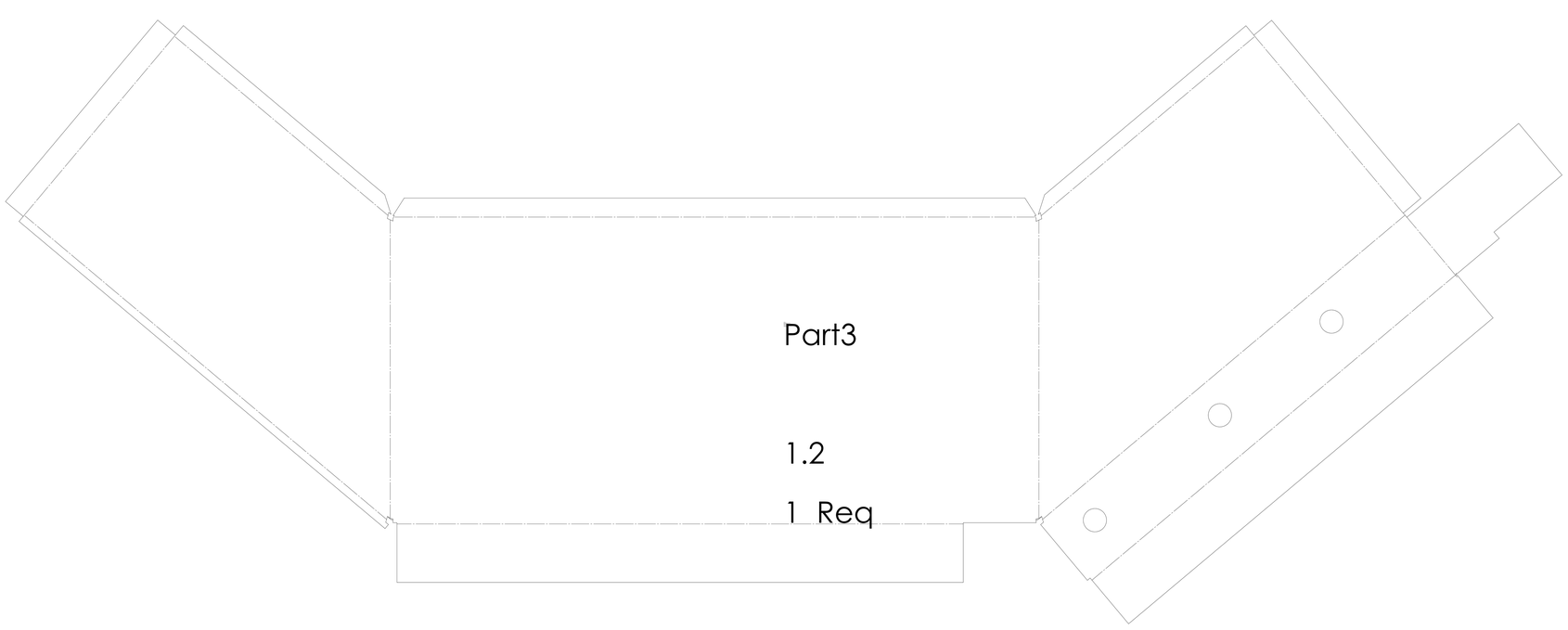

Part3

1.2

1 Req

SPPL-CS-01-450-P00

Joining Brace

2 Galvabond

Note: 1 of Req

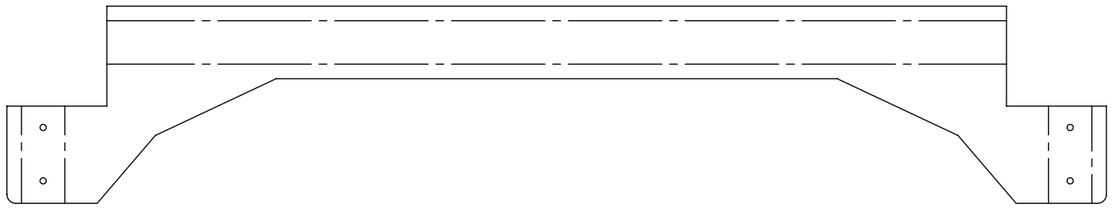

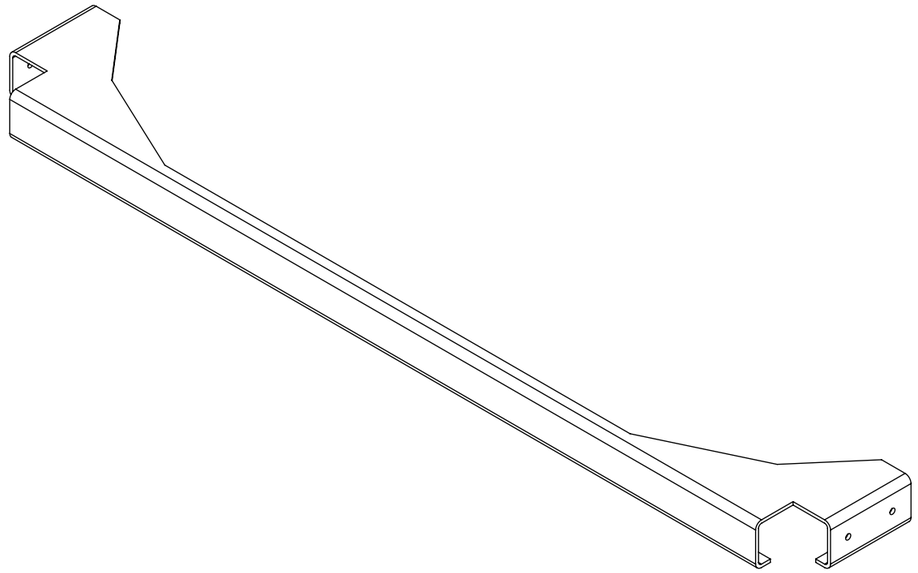

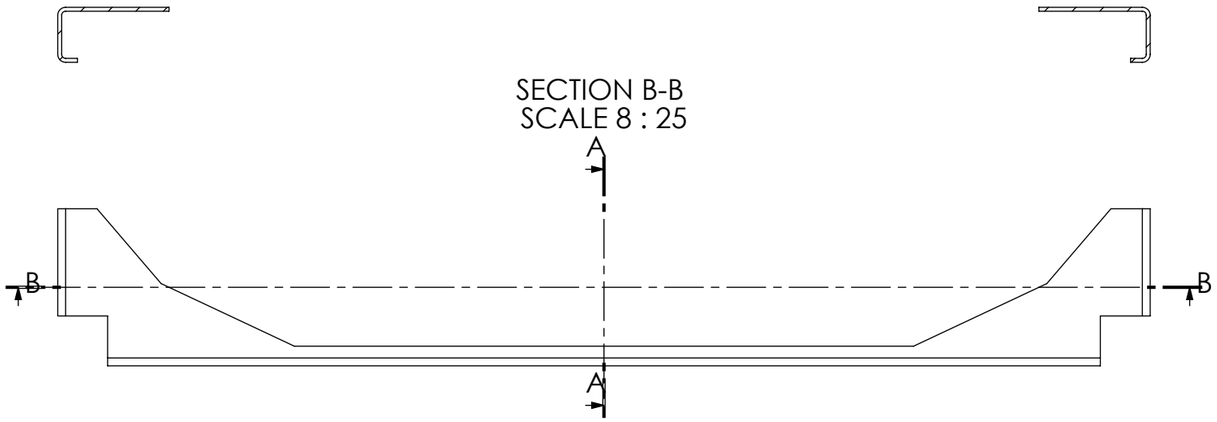

SECTION A-A
SCALE 8 : 25

STODDART
MANUFACTURING
TOM STODDART Pty Ltd ACN 009 690 251
149 Jackson Rd Sunnybank Hills Qld 4109
PO Box 420 Sunnybank Qld 4109
Phone (617) 3345 5011 Fax (617) 3344 1000
Email sunnybank@stoddart.com.au
Quality in stainless steel

	NAME	SIGNATURE	DATE
DRAWN	F Caramat		7/04/2010
APPV'D			

Weight: 0.50 Kg
Surface Area: 0.07 M2

UNLESS OTHERWISE SPECIFIED:
DIMENSIONS ARE IN MILLIMETERS

MATERIAL: Galvabond
THICKNESS: 2
FINISH:

PART No: **SPPL-CS-01-450-P003**
DESCRIPTION: Leg Bracket
DWG No: Draw1
Dwg. Issue 2

DO NOT SCALE DRAWING

This drawing remains the property of Tom Stoddart Pty Ltd & cannot be reproduced without prior permission.

A3

Note: 1 of Req

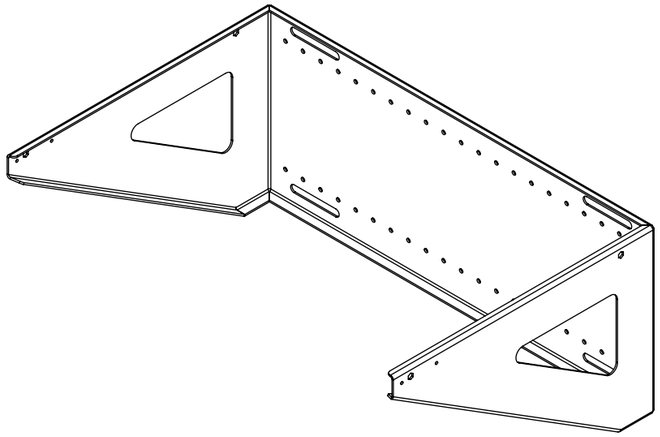

SECTION B-B
SCALE 3 : 20

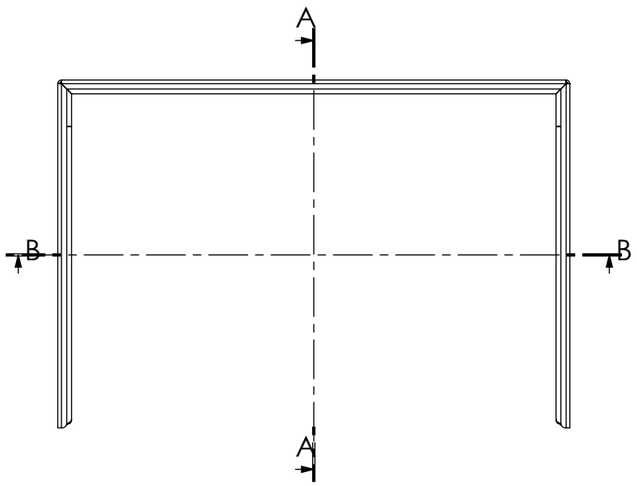

SECTION A-A
SCALE 3 : 20

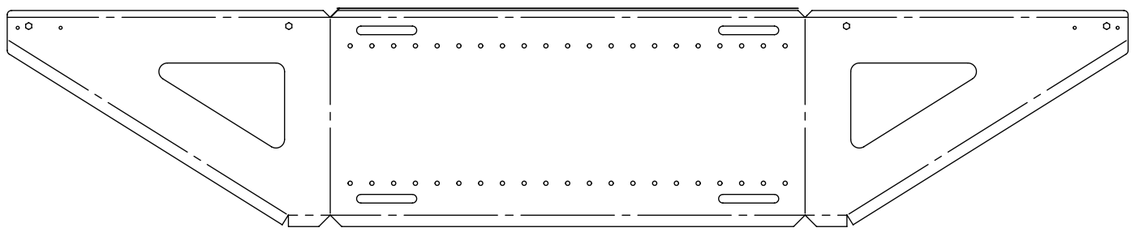

STODDART
MANUFACTURING
TOM STODDART Pty Ltd ACN 009 690 251
149 Jackson Rd Sunnybank Hills Qld 4109
PO Box 420 Sunnybank Qld 4109
Phone (617) 3345 5011 Fax (617) 3344 1000
Email sunnybank@stoddart.com.au
Quality in stainless steel

	NAME	SIGNATURE	DATE
DRAWN	F Caramat		7/04/2010
APPV'D			

Weight: 3807.00 Kg
Surface Area: 493998.54 M2

UNLESS OTHERWISE SPECIFIED:
DIMENSIONS ARE IN MILLIMETERS

MATERIAL: Galvabond
THICKNESS: 2
FINISH:

PART No: **SPPL-CS-01-450-P002**
DESCRIPTION: Bracket
DWG No: Draw1
Dwg. Issue 2

DO NOT SCALE DRAWING

This drawing remains the property of Tom Stoddart Pty Ltd & cannot be reproduced without prior permission.

A3 | Sheet 6 of 9

F:\5_Plumbing\03_Engineering - Plumbing\R& D- Plumbing\Janitorial Sink\

Note: 2 of Req

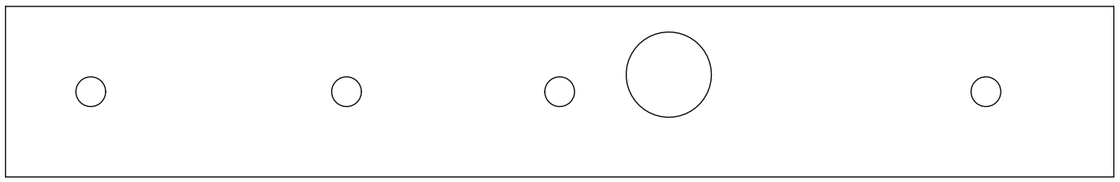

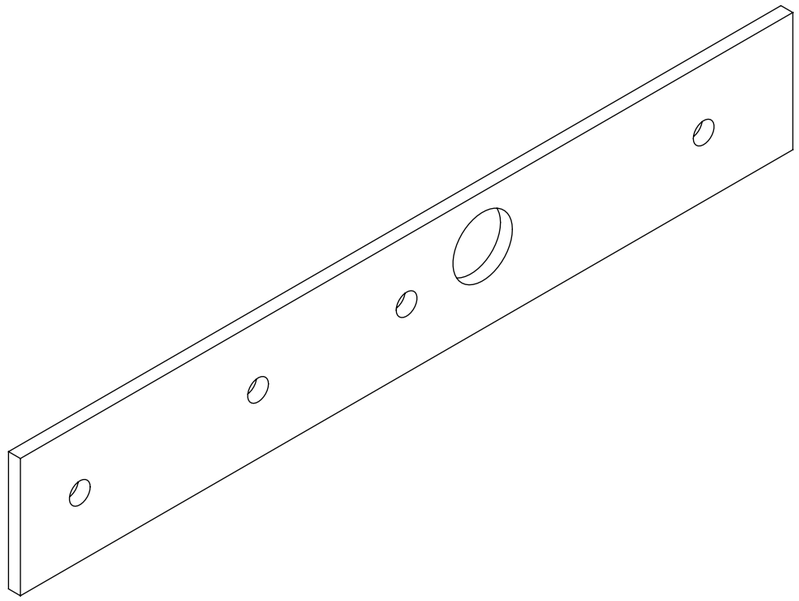

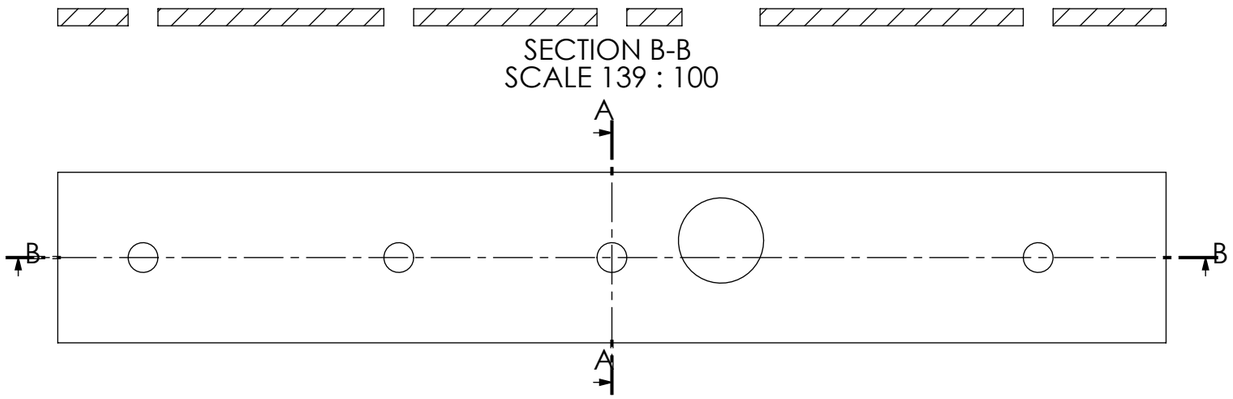

SECTION B-B
SCALE 139 : 100

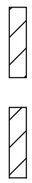

SECTION A-A
SCALE 139 : 100

STODDART
MANUFACTURING
TOM STODDART Pty Ltd ACN 009 690 251
149 Jackson Rd Sunnybank Hills Qld 4109
PO Box 420 Sunnybank Qld 4109
Phone (617) 3345 5011 Fax (617) 3344 1000
Email sunnybank@stoddart.com.au
Quality in stainless steel

	NAME	SIGNATURE	DATE
DRAWN	F Caramat		7/04/2010
APPV'D			

Weight: 0.04 Kg
Surface Area: 0.01 M2

UNLESS OTHERWISE SPECIFIED:
DIMENSIONS ARE IN MILLIMETERS

MATERIAL: Galvabond
THICKNESS: 2
FINISH:

PART No: **SPPL-CS-01-450-P005**
DESCRIPTION: Joining Brace
DWG No: Draw1
Dwg. Issue 2

DO NOT SCALE DRAWING

This drawing remains the property of Tom Stoddart Pty Ltd & cannot be reproduced without prior permission.

A3 | Sheet 7 of 9

F:\5_Plumbing\03_Engineering - Plumbing\R& D- Plumbing\Janitorial Sink\

Note: 1 of Req

SECTION B-B
SCALE 13 : 100

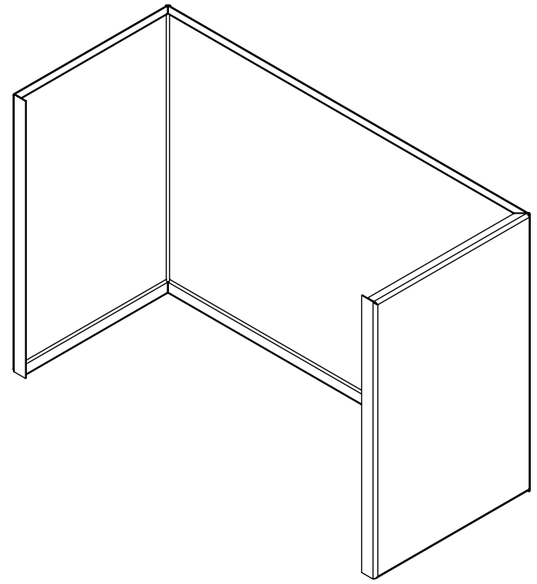

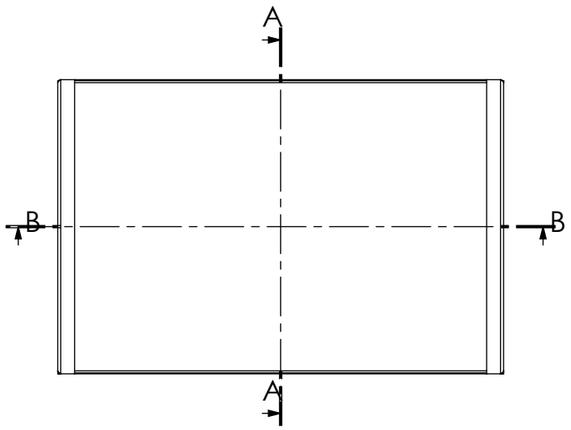

SECTION A-A
SCALE 13 : 100

STODDART
MANUFACTURING
TOM STODDART Pty Ltd ACN 009 690 251
149 Jackson Rd Sunnybank Hills Qld 4109
PO Box 420 Sunnybank Qld 4109
Phone (617) 3345 5011 Fax (617) 3344 1000
Email sunnybank@stoddart.com.au
Quality in stainless steel

	NAME	SIGNATURE	DATE	UNLESS OTHERWISE SPECIFIED: DIMENSIONS ARE IN MILLIMETERS
DRAWN	F Caramat		7/04/2010	
APPV'D				MATERIAL:
Weight: Surface Area:				THICKNESS: FINISH:

PART No: **Copy of Part2**

DESCRIPTION:

DWG No: Draw1

Dwg. Issue 2

DO NOT SCALE DRAWING

This drawing remains the property of Tom Stoddart Pty Ltd & cannot be reproduced without prior permission.

A3

F:\5_Plumbing\03_Engineering - Plumbing\R& D- Plumbing\Janitorial Sink\

Note: 1 of Req

SECTION B-B
SCALE 11 : 100

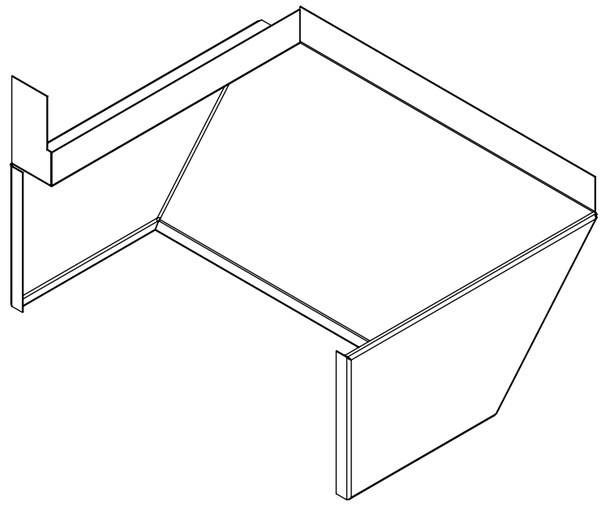

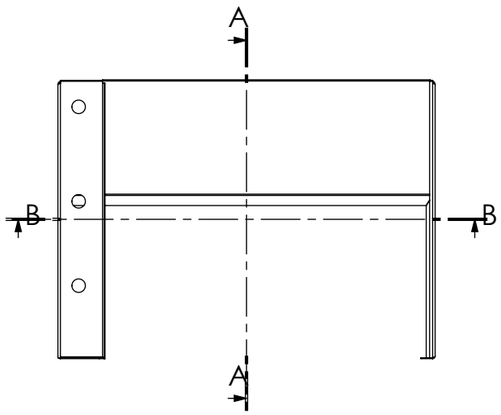

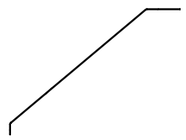

SECTION A-A
SCALE 11 : 100

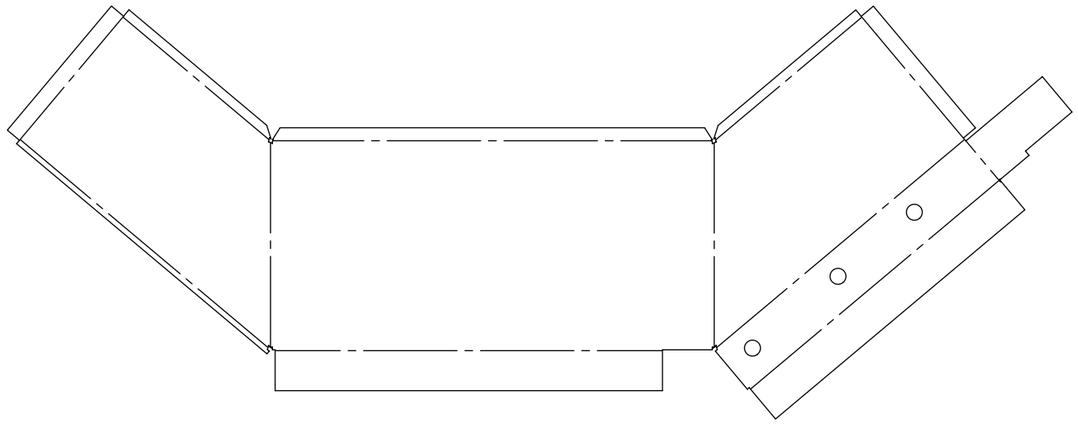

STODDART
MANUFACTURING
TOM STODDART Pty Ltd ACN 009 690 251
149 Jackson Rd Sunnybank Hills Qld 4109
PO Box 420 Sunnybank Qld 4109
Phone (617) 3345 5011 Fax (617) 3344 1000
Email sunnybank@stoddart.com.au
Quality in stainless steel

	NAME	SIGNATURE	DATE
DRAWN	F Caramat		7/04/2010
APPV'D			

UNLESS OTHERWISE SPECIFIED:
DIMENSIONS ARE IN MILLIMETERS

MATERIAL:
THICKNESS: 1.2
FINISH:

Weight:
Surface Area:

PART No: **Part3**

DESCRIPTION:

DWG No: Draw1

Dwg. Issue 2

DO NOT SCALE DRAWING

This drawing remains the property of Tom Stoddart Pty Ltd & cannot be reproduced without prior permission.

A3

Sheet 9 of 9

F:\5_Plumbing\03_Engineering - Plumbing\R& D- Plumbing\Janitorial Sink\